Warranty: 10 years
Toprail: Standard
Bottom Dimension: 10.15 m2
Poolwater depth: 1.20 m
Pool Watervolume: 12.18 m3

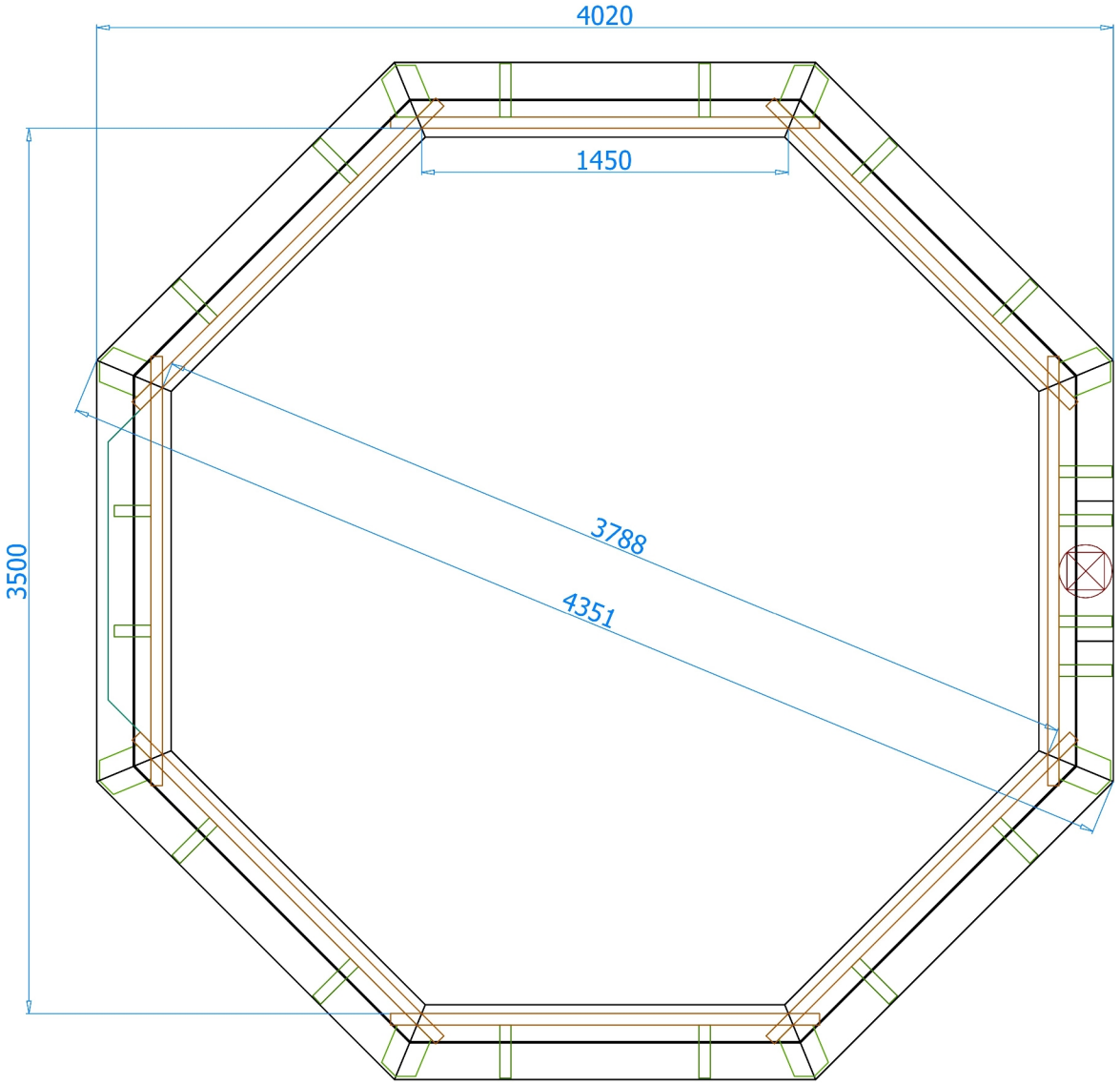

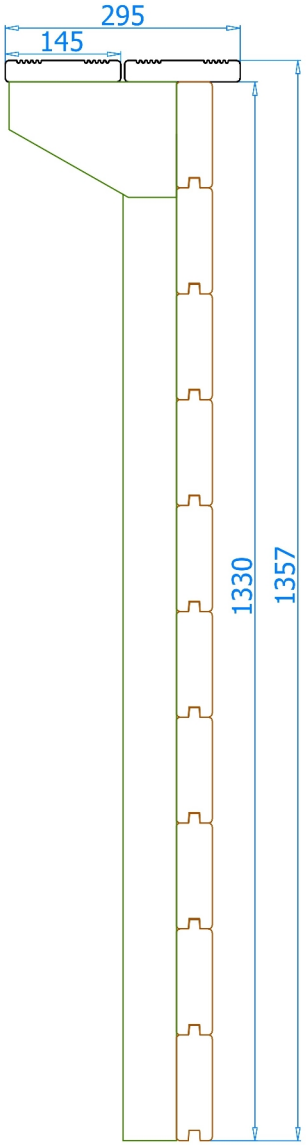

symbole	dimension [mm]
D	3788
D'	4351
W	3500
W'	4020
H	1330
H'	1357

INTERLINE		INTERHIVA	Typ. Octagonal Warr. : 10 Years
Design:	2013.09.16	Bali 4.40m	Material: Impregnated Spruce
Drawn:	J.Siemieński	Inside Dim.: 379x133	interhiva the leisure people
Edited:	2013.09.19	Outside Dim.: 435x136	